UM0971
User manual

STEVAL-IHM031V1 low voltage three-phase inverter demonstration board

Introduction

The STEVAL-IHM031V1 demonstration board is a low voltage three-phase power stage inverter designed to perform permanent magnet motor controls. To this purpose, it must be connected to an additional control logic stage (usually based on an 8/32-bit microcontroller).

According to the existing wide range of motor types and control techniques, it has been designed to offer large flexibility by allowing full configurability.

In particular, it can be used for implementing scalar control (also known as current six-step mode or trapezoidal shaped back-EMF) and field oriented control (sinusoidal-shaped back-EMF PMSM).

The system has been specifically designed to achieve accurate and fast conditioning of the current and back-EMF feedbacks, thereby matching the requirements typical of high-end applications such as field oriented motor control. Back-EMF conditioning networks can include an amplification stage for managing very low motor speed. Circuit networks are provided to implement different techniques of sensorless speed and rotor position detection. The input voltage range is from 12 V up to 24 V with no need to set any jumper for selecting the input voltage level. Nominal power is up to 120 W. A dedicated power supply has been designed to provide power +5 V and +3.3 V voltages to supply the control stage board. The latter can be connected to the STEVAL-IHM031V1 board by using a dedicated motor control connector, generally available in most boards based on microcontrollers produced by ST. The three-phase inverter bridge is based on the STS8DNH3LL power MOSFET dual-in-package SO-8 and L6387E gate driver. The board is self-protected by overcurrent events and for each power MOSFET the case temperature is sensed through a temperature sensor. A connector exists to read signals coming from encoder and Hall sensors.

Figure 1. STEVAL-IHM031V1 demonstration board

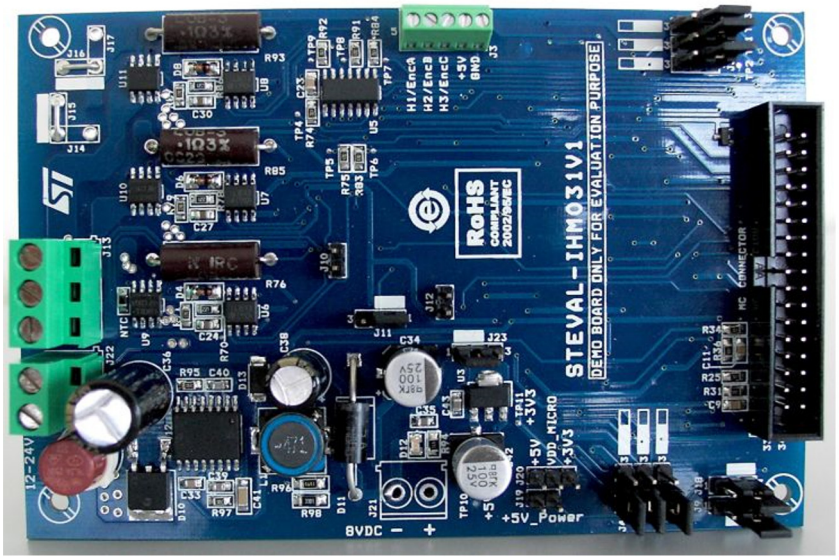

Contents

1 STEVAL-IHM031V1 features 6

1.1 Electrical and functional characteristics 6

1.2 Target application 6

1.3 Safety and operating instructions 6

1.3.1 General 6

1.3.2 Demonstration board intended use 7

1.3.3 Demonstration board installation 7

1.3.4 Electronic connections 7

1.3.5 Demonstration board operation 7

2 Board description 8

2.1 System architecture 8

2.2 Power supply circuit 9

2.2.1 LD1117xx33 and LD1117xx50 characteristics 9

2.2.2 L4976 characteristics 12

2.2.3 Inverse polarity protection 12

2.3 Gate driving 12

2.4 Three-phase inverter power switches 14

2.4.1 STS8DNH3LL characteristics 14

2.5 BEMF conditioning network 15

2.5.1 Zero-crossing methods for BEMF reading 16

2.5.2 Low amplitude BEMF signal amplification 16

2.5.3 Virtual neutral (or natural) point reconstruction 17

2.6 Current sensing and conditioning network 18

2.6.1 Bipolar current reading configuration 18

2.6.2 Unipolar current reading configuration 19

2.6.3 Three-shunt current reading configuration 21

2.6.4 Single-shunt current reading configuration 21

2.6.5 Overcurrent protection 22

2.7 Temperature sensing and protection 23

3 Descriptions of connectors and jumpers 24

3.1 Jumper description 24

3.2 Connector placement 25
3.3 Connector description 26

4 STEVAL-IHM0031V1 hardware settings 27
4.1 Settings for six-step current control (block commutation) 27
4.2 Settings for three-shunt configuration and FOC control 28

5 Board schematic 30

6 BOM list 35

7 References 43

8 Revision history 44

List of tables

Table 1. Absolute maximum ratings . . . 10
Table 2. Electrical characteristics of the LD1117#33 . . . 10
Table 3. Electrical characteristics of the LD1117#50 . . . 11
Table 4. Features . . . 14
Table 5. Absolute maximum ratings . . . 14
Table 6. Low amplitude BEMF jumper configuration . . . 17
Table 7. Virtual neutral point reconstruction . . . 18
Table 8. AC current jumper configuration . . . 19
Table 9. DC current jumper configuration . . . 21
Table 10. Three-shunt jumper settings (default) . . . 21
Table 11. Single-shunt jumper settings . . . 21
Table 12. Jumper description . . . 24
Table 13. Connector pinout description . . . 26
Table 14. Single-shunt current reading - jumper configuration . . . 27
Table 15. Sensored mode - jumper configuration (Hall sensors for rotor position detecting) . . . 27
Table 16. Sensorless mode - jumper configuration (BEMF reading w/o amplification) . . . 27
Table 17. Sensorless mode - jumper configuration (low BEMF reading w/o amplification) . . . 28
Table 18. Virtual neutral point reconstruction - jumper configuration . . . 28
Table 19. Three-shunt current reading . . . 29
Table 20. Encoder/Hall sensor speed reading . . . 29
Table 21. BOM . . . 35
Table 22. Document revision history . . . 44

List of figures

Figure 1. STEVAL-IHM031V1 demonstration board 1
Figure 2. STEVAL-IHM031V1 block scheme 8
Figure 3. Power supply block diagram 9
Figure 4. LD1117 family packages 10
Figure 5. Typical application circuit 12
Figure 6. Block diagram 13
Figure 7. Gate driving network 13
Figure 8. STS8DNH3LL 14
Figure 9. Back-EMF conditioning network 15
Figure 10. Low back-EMF amplification network 16
Figure 11. AC current reading configuration 18
Figure 12. Single-shunt configuration 20
Figure 13. Overcurrent protection circuit 22
Figure 14. Temperature sensing circuit 23
Figure 15. STEVAL-IHM0031V1 connector placement 25
Figure 16. Bemf_hall_encoder schematic 30
Figure 17. Current conditioning network schematic 31
Figure 18. Driver and power MOSFET schematic 32
Figure 19. Motor control connector schematic 33
Figure 20. Power supply schematic 34

1 STEVAL-IHM031V1 features

1.1 Electrical and functional characteristics

The information below lists the converter specification data and the main parameters fixed for the STEVAL-IHM0031V1 demonstration board.

- Minimum input voltage: 12 VDC
- Maximum input voltage: 24 VDC
- Maximum output power for motor up to 120 W
- Circuit protection against input reverse polarity
- 5 VDC auxiliary power supply based on the LD1117xx50
- 3.3 VDC auxiliary power supply based on the LD1117xx33
- 8 VDC auxiliary power supply based on the L4976
- Power MOSFET STS8DNH3LL dual N-channel in SO-8 package
- Motor control connector for interface with STM32 and STM8 microcontroller family demonstration boards
- Hall/encoder inputs
- Fully configurable to implement both scalar and field oriented motor control driving strategies

1.2 Target application

- Battery powered high-end tools
- Medical applications
- Autonomous mover
- Super silent and high-efficiency water pump for cooling/heating applications

1.3 Safety and operating instructions

1.3.1 General

Warning: During assembly and operation, the STEVAL-IHM031V1 demonstration board poses several inherent hazards, including bare wires, moving or rotating parts, and hot surfaces. There is a danger of serious personal injury and damage to property, if the kit or its components are improperly used or installed incorrectly.

All operations involving transportation, installation and use, as well as maintenance, is to be carried out by skilled technical personnel (national accident prevention rules must be observed). For the purposes of these basic safety instructions, “skilled technical personnel” are suitably qualified people who are familiar with the installation, use, and maintenance of power electronic systems.

1.3.2 Demonstration board intended use

The STEVAL-IHM031V1 demonstration board is a component designed for demonstration purposes only, and is not to be used for electrical installation or machinery. The technical data as well as information concerning the power supply conditions must be taken from the relevant documentation and strictly observed.

1.3.3 Demonstration board installation

The installation and cooling of the demonstration board is in accordance with the specifications and the targeted application.

- The motor drive converters are protected against excessive strain. In particular, no components are to be bent, or isolating distances altered, during the course of transportation or handling.
- No contact must be made with other electronic components and contacts.
- The boards contain electrostatically sensitive components that are prone to damage through improper use. Electrical components must not be mechanically damaged or destroyed (to avoid potential health risks).

1.3.4 Electronic connections

Applicable national accident prevention rules must be followed when working on the main power supply with a motor drive. The electrical installation is completed in accordance with the appropriate requirements (e.g., cross-sectional areas of conductors, fusing, PE connections, etc.).

1.3.5 Demonstration board operation

A system architecture which supplies power to the STEVAL-IHM031V1 demonstration board is equipped with additional control and protective devices in accordance with the applicable safety requirements (e.g., compliance with technical equipment and accident prevention rules).

Warning: **Do not touch the demonstration board after disconnection from the voltage supply, as several parts and power terminals which contain possibly energized capacitors need to be allowed to discharge.**

---

2 Board description

2.1 System architecture

The system can be schematized in five main blocks (see *Figure 2*):

- Power supply: this section accepts a supply voltage between 12 V and 24 V and provides, in output, three supply voltage levels: +3.3 V, +5 V, and +8 V. The first two are also available on the MC connector for supplying the control unit (not part of this STEVAL-IHM031V1 board). Please read *Section 2.2* for details on used devices.
- Gate driving: the power switches of the three-phase inverter bridge are driven by (3x) L6387E high/low side drivers. Refer to *Section 2.3* for details on driving network.
- Three-phase inverter: the power MOSFET STS8NH3LL is the device used for the inverter bridge. As it is made up of two NMOS integrated in the same package, three ICs are used in total. Please consult *Section 2.4* for details on power switches.
- Back-EMF voltage conditioning: this circuit senses and/or amplifies the voltage back-EMF of each motor phase. See *Section 2.5* for details.
- Current reading and conditioning: this circuit network is used to sense and amplify the current flowing through the shunt resistors. This block implements a hardware overcurrent protection. See *Section 2.6* for details on how it operates.
- Motor speed and rotor position: a connector and circuitry when connecting a quadrature encoder/Hall sensor signal for motor speed/rotor position sensing.
- Control unit Interface: this is a signal interface (motor control connector) where a control unit board can be connected to implement motor driving. ST distributes several demonstrators and demonstration boards which are compatible with this interface. For references, please read *Section 6*.

Figure 2. STEVAL-IHM031V1 block scheme

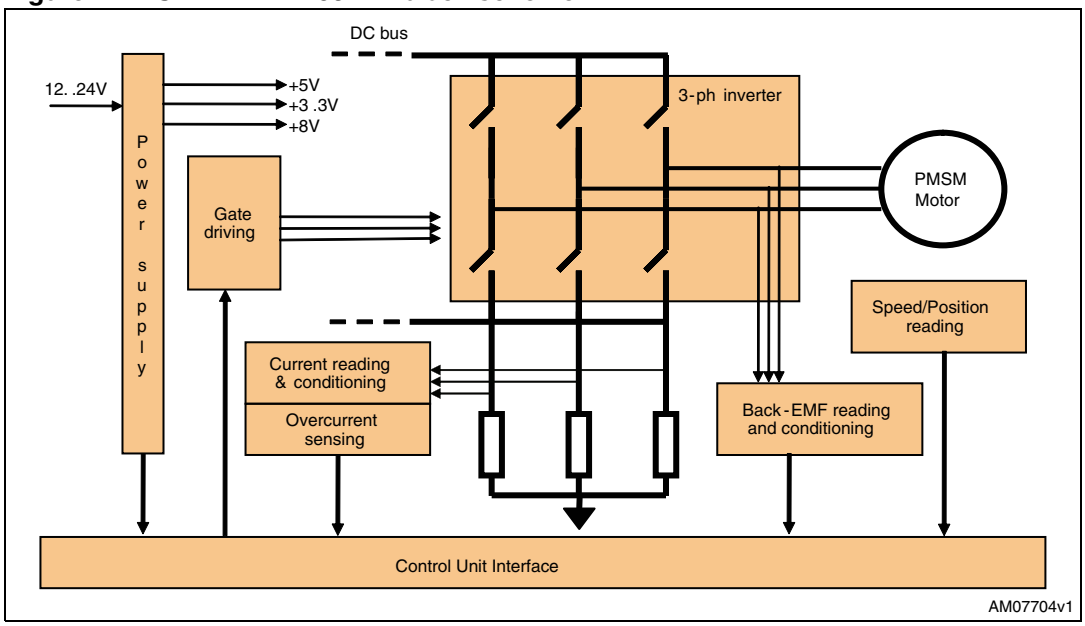

2.2 Power supply circuit

The STEVAL-IHM031V1 board is designed to work with an input voltage bus ranging from 12 V up to 24 V (nominal values). The bus voltage supplies the three-phase inverter stage.

To allow proper working below the nominal 12 V lower voltage limit, an opportune power supply stage has been designed, taking into account several aspects, such as:

- ensuring supply voltage for the gate driver L6387E (+8 V)
- +5 VDC generation with current capability of 800 mA
- +3.3 VDC generation with current capability of 800 mA
- providing externally auxiliary 8 VDC power supply

Figure 3 is a block diagram representation of the power supply stage used for the STEVAL-IHM031V1 board:

Figure 3. Power supply block diagram

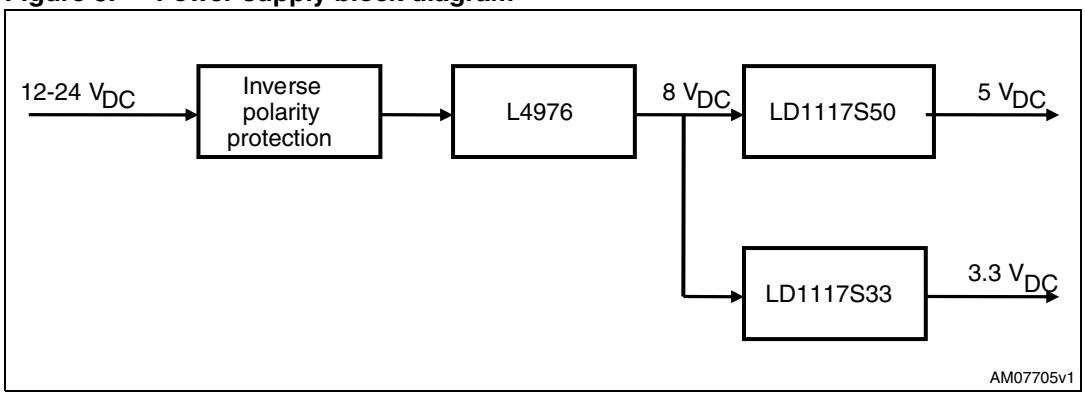

In a case where the bus voltage input is below nominal voltage (12 VDC), the L4976 regulator is no longer able to provide 8 V voltage level at its output. Nevertheless, it is still possible to continue using the board by providing an external +8 V voltage through connector J21.

2.2.1 LD1117xx33 and LD1117xx50 characteristics

The LD1117xx33/50 is a low drop voltage regulator able to provide up to 800 mA of output current at 3.3 V/5 V output voltage. The main features follow.

Figure 4. LD1117 family packages

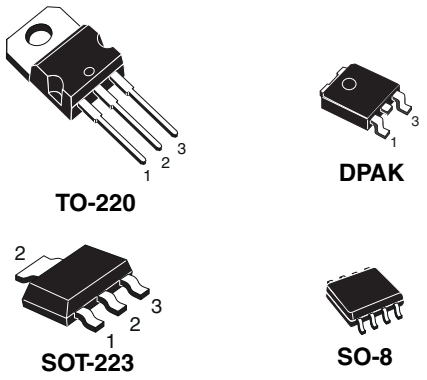

Table 1. Absolute maximum ratings

Symbol	Parameter		Value	Unit
V_{IN} (1)	DC input voltage		15	V
P_{TOT}	Power dissipation		12	W
T_{STG}	Storage temperature range		-40 to +150	°C
T_{OP}	Operating junction temperature range	for C version	-40 to +125	°C
		for standard version	0 to +125	°C

1. Absolute maximum rating of V_{IN} = 18 V, when I_{OUT} is lower than 20 mA.

Table 2. Electrical characteristics of the LD1117#33

Symbol	Parameter	Test condition	Min.	Typ.	Max.	Unit
V_O	Output voltage	V_{in} = 5.3 V, I_O = 10 mA, T_J = 25 °C	3.267	3.3	3.333	V
V_O	Output voltage	I_O = 0 to 800 mA, V_{in} = 4.75 to 10 V	3.235		3.365	V
ΔV_O	Line regulation	V_{in} = 4.75 to 15 V, I_O = 0 mA		1	6	mV
ΔV_O	Load regulation	V_{in} = 4.75 V, I_O = 0 to 800 mA		1	10	mV
ΔV_O	Temperature stability			0.5		%
ΔV_O	Long term stability	1000 hrs, T_J = 125 °C		0.3		%
V_{in}	Operating input voltage	I_O = 100 mA			15	V
I_d	Quiescent current	$V_{in} \leq$ 15 V		5	10	mA
I_O	Output current	V_{in} = 8.3 V, T_J = 25 °C	800	950	1300	mA
eN	Output noise voltage	B = 10 Hz to 10 kHz, T_J = 25 °C		100		µV
SVR	Supply voltage rejection	I_O = 40 mA, f = 120 Hz, T_J = 25 °C V_{in} = 6.3 V, V_{ripple} = 1 V_{PP}	60	75		dB

Table 2. Electrical characteristics of the LD1117#33 (continued)

Symbol	Parameter	Test condition	Min.	Typ.	Max.	Unit
V_d	Dropout voltage	I_O = 100 mA		1	1.1	V
		I_O = 500 mA		1.05	1.15	
		I_O = 800 mA		1.10	1.2	
	Thermal regulation	T_a = 25 °C, 30 ms pulse		0.01	0.1	%/W

Table 3. Electrical characteristics of the LD1117#50

Symbol	Parameter	Test condition	Min.	Typ.	Max.	Unit
V_O	Output voltage	V_{in} = 7 V, I_O = 10 mA, T_J = 25 °C	4.95	5	5.05	V
V_O	Output voltage	I_O = 0 to 800 mA, V_{in} = 6.5 to 15 V	4.9		5.1	V
ΔV_O	Line regulation	V_{in} = 6.5 to 15 V, I_O = 0 mA		1	10	mV
ΔV_O	Load regulation	V_{in} = 6.5 V, I_O = 0 to 800 mA		1	15	mV
ΔV_O	Temperature stability			0.5		%
ΔV_O	Long term stability	1000 hrs, T_J = 125 °C		0.3		%
V_{in}	Operating input voltage	I_O = 100 mA			15	V
I_d	Quiescent current	$V_{in} \leq$ 15 V		5	10	mA
I_O	Output current	V_{in} = 10 V, T_J = 25 °C	800	950	1300	mA
eN	Output noise voltage	B = 10 Hz to 10 kHz, T_J = 25 °C		100		µV
SVR	Supply voltage rejection	I_O = 40 mA, f = 120 Hz, T_J = 25 °C V_{in} = 8 V, V_{ripple} = 1 V_{PP}	60	75		dB
V_d	Dropout voltage	I_O = 100 mA		1	1.1	V
		I_O = 500 mA		1.05	1.15	
		I_O = 800 mA		1.10	1.2	
	Thermal regulation	T_a = 25 °C, 30 ms pulse		0.01	0.1	%/W

2.2.2 L4976 characteristics

The L4976 is a step down monolithic power switching regulator delivering 1 A at a voltage between 3.3 V and 50 V (selected by a simple external divider). A wide input voltage range from 8 V to 55 V and output voltages regulated from 3.3 V to 40 V cover the majority of today's applications. Features of this new generation of DC-DC converters include pulse-by-pulse current limit, hiccup mode for short-circuit protection, voltage feedforward regulation, protection against feedback loop disconnection and thermal shutdown. The device is available in plastic dual-in-line, MINIDIP 8 for standard assembly, and SO16W for SMD assembly. It features:

- Up to 1 A step down converter
- Operating input voltage from 8 V to 55 V
- Precise 5.1 V reference voltage
- Output voltage adjustable from 0.5 V to 50 V
- Switching frequency adjustable up to 300 kHz
- Voltage feedforward
- Zero load current operation
- Internal current limiting (pulse-by-pulse and hiccup mode)
- Protection against feedback disconnection
- Thermal shutdown

Figure 5. Typical application circuit

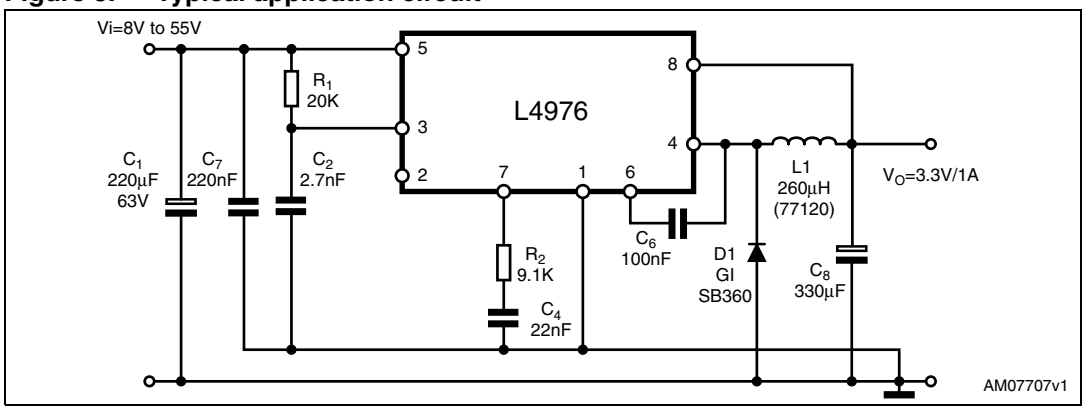

2.2.3 Inverse polarity protection

To prevent accidental polarity inversion when supplying the STEVAL-IHM031V1 board through connector J22, a protection circuit has been provided. It is made up of a diode and a fuse of 6.3 A. In the case of polarity inversion occurring, the fuse F1 is permanently damaged and needs to be replaced before the next system operation.

2.3 Gate driving

The L6387E is a high-voltage device, in the DIP-8 and SO-8 package, manufactured with BCD “OFF-LINE” technology. It has a driver structure that enables the driving of an independent referenced N-channel power MOSFET or IGBT. The high side (floating) section

is enabled to work with voltage rail up to 600 V. The logic inputs are CMOS/TTL compatible for ease of interfacing with controlling devices. It features:

- High voltage rail up to 600 V
- dV/dt immunity ±50 V/nsec in full temperature range
- Driver current capability:
  - 400 mA source
  - 650 mA sink
- Switching times 50/30 nsec rise/fall with 1 nF load
- CMOS/TTL Schmitt trigger inputs with hysteresis and pull down
- Internal bootstrap diode
- Outputs in phase with inputs
- Interlocking function

Figure 6. Block diagram

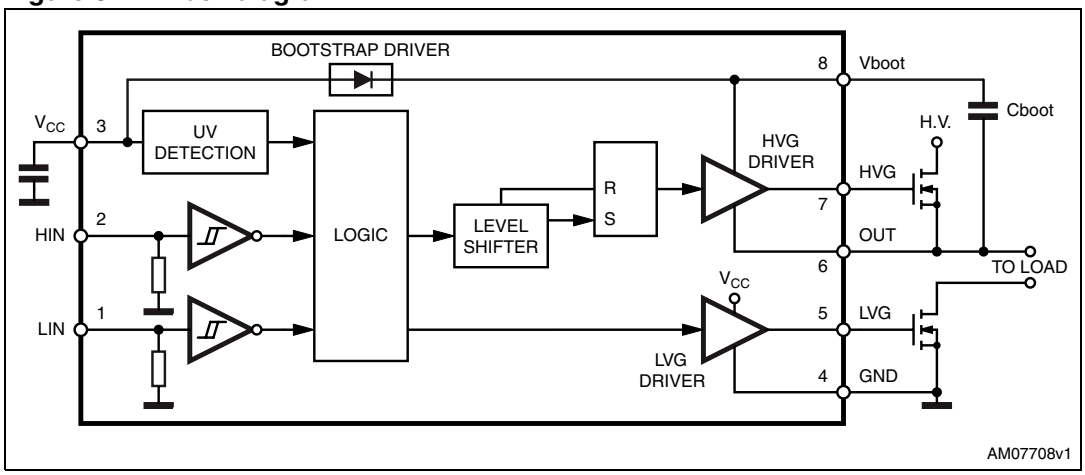

Figure 7 shows, in more detail, the circuit utilized for the turn-on and turn-off of the power MOSFETs.

Figure 7. Gate driving network

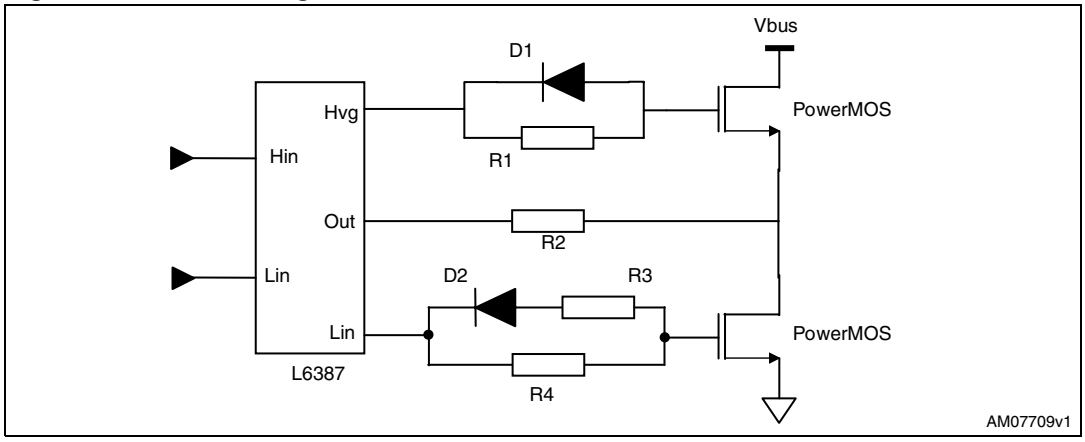

As can be deduced from *Figure 7*, during turn-on, power MOSFET gate capacitances are charged through R1 and R4 (220 Ω) resistors, while turn-off is fastened by the presence of diode D1 and D2.

The driver L6387E offers an interlocking feature to avoid undesired simultaneous turn-on of both driven power switches.

2.4 Three-phase inverter power switches

2.4.1 STS8DNH3LL characteristics

The STS8DNH3LL is a dual N-channel (30 V - 0.018 Ω - 8 A) low gate charge STripFET™ III power MOSFET in the SO-8 package.

Figure 8. STS8DNH3LL

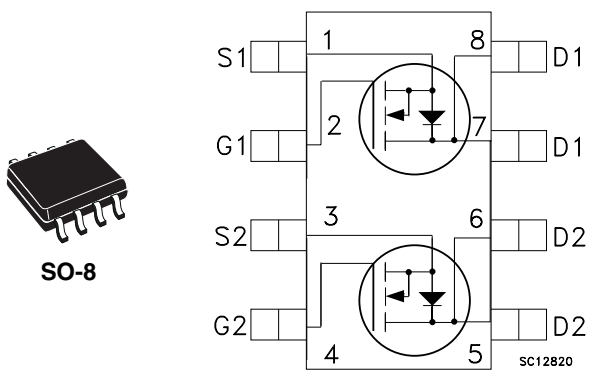

Table 4. Features

Type	V_{DSS}	$R_{DS(on)}$ max	I_D
STS8DNH3LL	30 V	< 0.022 Ω	8 A

Table 5. Absolute maximum ratings

Symbol	Parameter	Value	Unit
V_{DS}	Drain source voltage (v_{GS} = 0)	30	V
V_{GS}	Gate source voltage	±16	V
I_D	Drain current (continuous) at T_C = 25 °C	8	A
I_D	Drain current (continuous) at T_C = 100 °C	5	A
I_{DM} (1)	Drain current (pulsed)	32	A
P_{TOT}	Total dissipation at T_C = 25 °C	2	W
E_{AS} (2)	Single-pulse avalanche energy	100	mJ

1. Pulse width limited by safe operating area
2. Starting T_J = 25 °C, I_D = 6 A

2.5 BEMF conditioning network

Permanent magnet brushless DC motors require the electronic commutation of motor phases to respect the synchronization between statoric flux and that of the permanent magnet of the rotor.

Generally, a BLDC motor drive uses one or more sensors giving positional information to maintain synchronization.

Such implementation results in a higher drive cost due to sensor wiring and implementation in the motor. Moreover, sensors cannot be used in applications where the rotor is in closed housing and the number of electrical entries must be kept to a minimum value.

Therefore, for cost and technical reasons, the BLDC sensorless drive is an essential capability of a brushless motor controller. There exists various implementations of sensorless BLDC control techniques, most of them using motor back-EMF voltage as rotor position sensing signal.

In ST technical papers and application notes (please refer to *Section 6*) some topologies, their advantages and drawbacks, as well as their practical implementation, are described in detail.

STEVAL-IHM031V1 allows the easy implementation of most topologies described.

The network for reading back-EMF phase voltage has been designed to offer maximum configurability according to different motor type operations and control strategy.

For each motor phase, there exists a conditioning network such as the one schematized below in *Figure 9*:

Figure 9. Back-EMF conditioning network

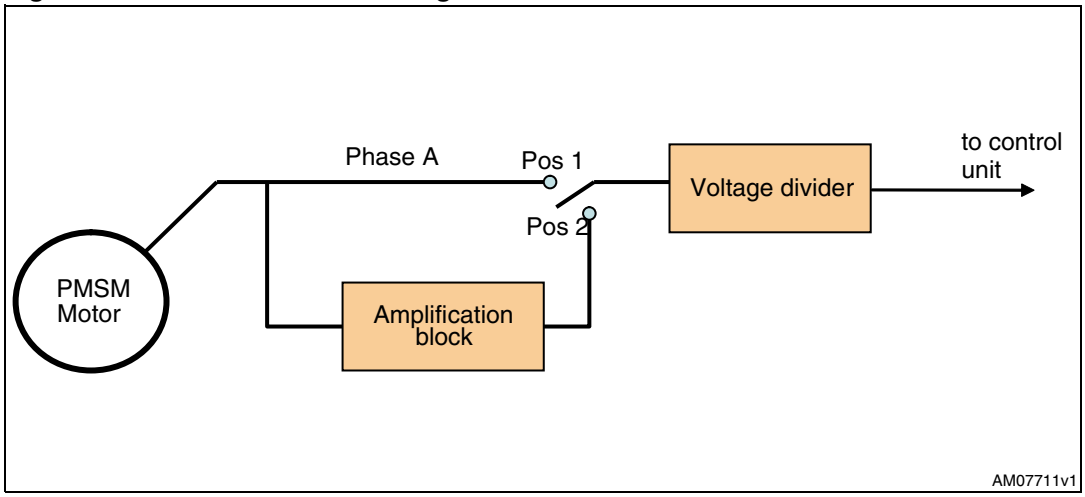

The switch can assume one of two different positions according to the type of back-EMF sensing methodology used.

2.5.1 Zero-crossing methods for BEMF reading

Putting the switch on Pos 1, the motor phase voltage is directly input to the voltage divider block.

When the patented ST zero-crossing method is used, the voltage divider is simply made up of a 10 kΩ series resistor for limiting the current to the control unit that processes the signal.

When the “classic” (industry standard) method is used, the voltage divider must scale and filter the back-EMF voltage before it is input to the control unit. The partition ratio determination depends on motor bus voltage. Therefore, the voltage divider resistor and filtering capacitor values are calculated by the user.

2.5.2 Low amplitude BEMF signal amplification

When the back-EMF signal is very low (low speed) or for low voltage applications, the back-EMF zero-crossing detection can become difficult due to the very weak signal. The application note AN1103; *improved B-EMF detection for low-speed and low-voltage applications with ST72141*, offers a circuit solution for improving back-EMF zero-crossing detection at very low speeds or for low voltage applications.

This circuit can greatly improve the performance of sensorless BLDC drives in low voltage applications, especially for automotive applications. With this technique, the sensorless drive can be used in much wider speed ranges.

With reference to *Figure 9*, by setting Pos 2, an amplification block is inserted in back-EMF signal processing, therefore allowing all the cases listed above to be covered.

For the actual amplification network, please see the circuit schematic in *Figure 10*:

Figure 10. Low back-EMF amplification network

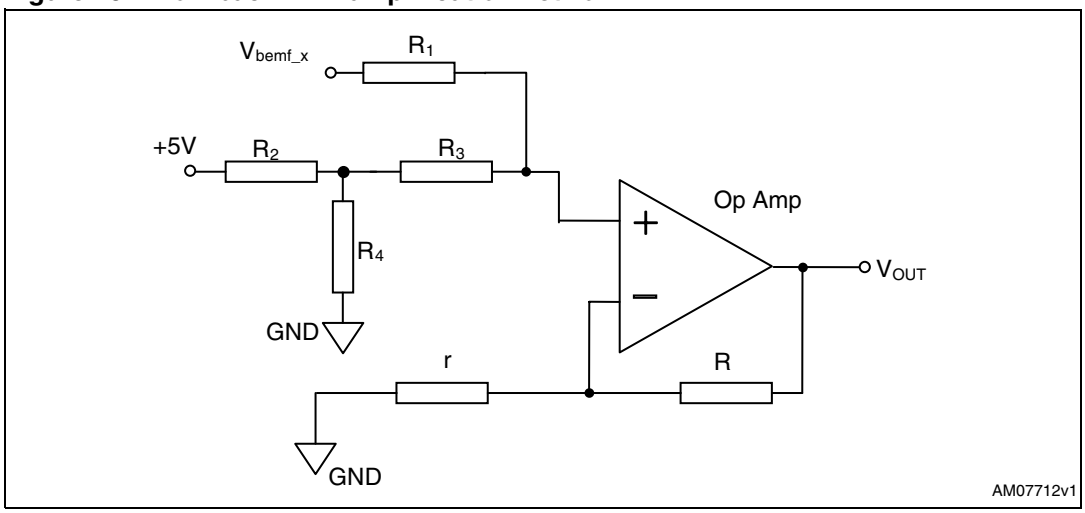

The output voltage Vout can be expressed in function of generic back-EMF phase voltage Vbemf_x in this way:

Equation 1

$$Vout = Vbias + G \cdot Vbemf_x$$

With the resistor values actually used in the circuit schematic:

Equation 2

$$R1 = R3 = R4 = r = 2200\Omega$$

- R2=1500 Ω
- R=10000 Ω

we have:

Equation 3

$$Vbias = 2.5\frac{R1 + R}{R1 + R2} = 1.77$$

and:

Equation 4

$$G = \frac{R1 + R}{2R1} = 2.77$$

If needed, further adjustments on amplified Vout voltage can be done by means of the next block voltage divider, as shown in *Figure 1* and *9*.

Table 6 lists the involved jumpers and their positions for low amplitude BEMF amplification:

Table 6. Low amplitude BEMF jumper configuration

Jumper	Position
J1	Between 1-2
J4	Between 1-2
J7	Between 1-2

Moreover, please refer to *Section 3* for jumper setting configurations for outputting Vout signals through the Motor Control connector.

2.5.3 Virtual neutral (or natural) point reconstruction

When the classic analog method is used for back-EMF reading, there is a need to reconstruct the virtual neutral point of motor windings (when star connected). To this aim, there are different schemes. In particular, STEVAL-IHM031V1 allows implementation of both the following (though not at the same time):

1. to rebuild the virtual neutral motor using three resistors and a voltage divider and filter
2. a voltage divider of DC bus voltage to get a proper reference voltage which follows DC bus fluctuation

For a detailed explanation and principle schemes, please see *Section 3* of application note AN1946; *Sensorless BLDC motor control and BEMF sampling methods with ST7MC.*

Table 7 lists the involved jumpers and their positions for selecting how to reconstruct the virtual neutral point:

Table 7. Virtual neutral point reconstruction

Jumper	Position	Description
J9	Between 1-2	Three resistors used
	Between 2-3	DC bus voltage divider

2.6 Current sensing and conditioning network

2.6.1 Bipolar current reading configuration

The details of bipolar current sensing (also referred to as Alternating AC) reading configuration is shown in *Figure 11*. In this configuration, the alternating current signal on the shunt resistor, with positive and negative values, must be translated to be compatible with the single positive input of the microcontroller ADC converter used to read the current value. This means that the op amp must be biased in order to obtain a voltage on the output which makes it possible to measure the symmetrical alternating input signal.

Basically, the output signal from the op amp is made up of two terms: a bias voltage Vbias and an amplification of voltage drop across the shunt resistor (G). The formulas below show the relationships between network components and signal values.

Figure 11. AC current reading configuration

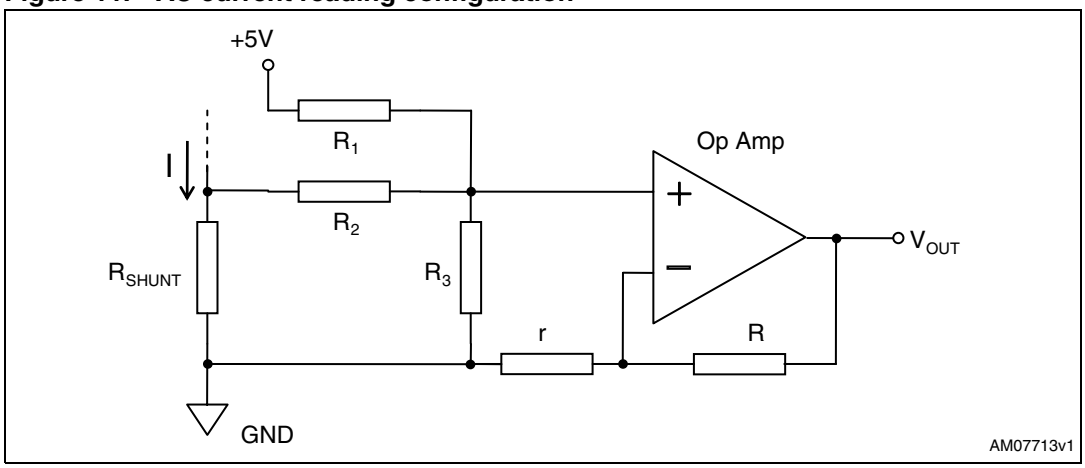

Equation 5

$$Vout = Vbias + G \cdot (Rshunt \cdot I)$$

Where:

Equation 6

$$Vbias = \frac{5}{\left(\frac{1}{R1} + \frac{1}{R2} + \frac{1}{R3}\right) \cdot R1} \cdot \frac{R + r}{r}$$

and:

Equation 7

$$G = \frac{1}{\left(\frac{1}{R1} + \frac{1}{R2} + \frac{1}{R3}\right) \cdot R2} \cdot \frac{R + r}{r}$$

With the resistor values actually used in the circuit schematic, it is:

- R1=5100 Ω
- R2=920 Ω
- R3=470 Ω
- r= 1000 Ω
- R= 5100 Ω

Therefore getting:

- Vbias=1.7534 Ω

and:

- G=1.944

This means that the maximum instantaneous current amplifiable without distortion is 8 A (corresponding to Vout = 3.3 V). The user can modify the maximum current value by changing the shunt resistor values.

Table 8 lists the involved jumper and their positions for AC current reading configuration:

Table 8. AC current jumper configuration

Jumper	Position
J10	Present
J11	Between 1-2
J12	Present

Note: The resistor R2 value of 920 Ω in the circuit schematic is made up of the sum of two resistors: one of 100 Ω, belonging to the low-pass filter across the shunt resistor and the second of 820 Ω belonging to the amplifier network.

2.6.2 Unipolar current reading configuration

The details of the single-shunt current sensing (also referred to as direct DC current) configuration are shown in *Figure 12*. This configuration is used when sampling is done on positive current on the shunt resistor. The only positive value read on the shunt resistor allows the setting of a higher gain for the op amp than the one set in AC reading mode.

Figure 12. Single-shunt configuration

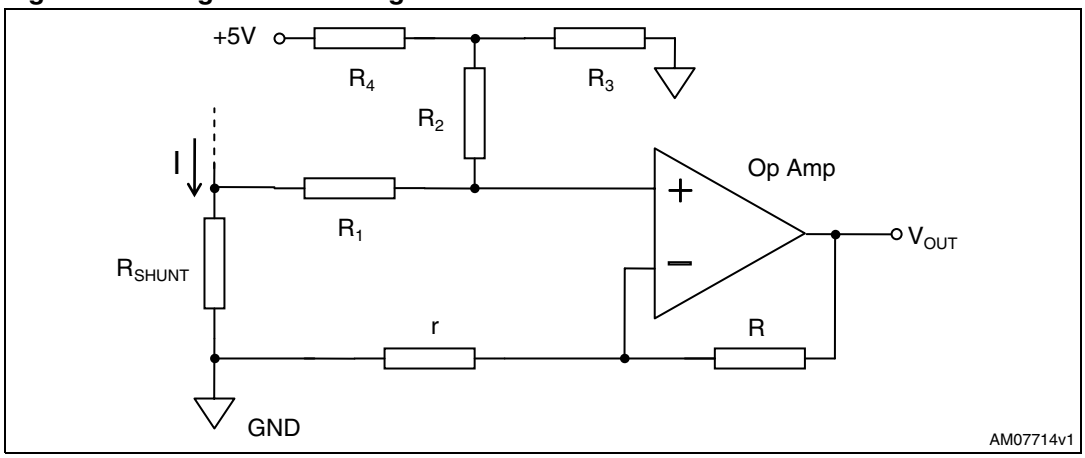

It is possible to calculate the voltage on the output of the op amp Vout as the sum of a bias voltage, Vbias, and an amplification of voltage drop across the shunt resistor (G):

Equation 8

$$Vout = Vbias + G \cdot (Rshunt \cdot I)$$

Where:

Equation 9

$$Vbias = \frac{\frac{R1}{R1+R2}}{\left(\frac{1}{R3} + \frac{1}{R1+R2} + \frac{1}{R4}\right) \cdot R4} \cdot \frac{R+r}{r}$$

and:

Equation 10

$$R4 = \frac{R3 \cdot R4}{R3 + R4}$$

With the resistor values actually used in the circuit schematic, we have:

- R1= 1100 Ω
- R2=1000 Ω
- R3=18 Ω
- R4=2700
- r=1000 Ω
- R=11900 Ω

Therefore getting:

- Vbias=0.2219 V
- G=6.2

Table 9 lists the involved jumpers and their positions for DC current reading configuration:

Table 9. DC current jumper configuration

Jumper	Position
J10	Not present
J11	Between 2-3
J12	Not present

This means that the maximum instantaneous current amplifiable without distortion is 7.7A (corresponding to Vout = 5 V). The user can modify the maximum current value by changing the shunt resistor values.

Note: The user should bear in mind that in AC and DC configuration the maximum value of op amp output voltages are different, 3.3 V and 5 V respectively, when the currents on the shunt resistor assume their allowed maximum values.

2.6.3 Three-shunt current reading configuration

The board can be configured to perform three-shunt current readings, one for each inverter leg. *Table 10* shows the related jumper settings:

Table 10. Three-shunt jumper settings (default)

Jumper	Position
J14	Present
J15	Not present
J16	Not present
J17	Present

2.6.4 Single-shunt current reading configuration

The board can be configured to perform single-shunt current readings. In this configuration, the sensed current on the Rshunt resistor is the one flowing on the negative DC bus link. *Table 14* shows the related jumper settings:

Table 11. Single-shunt jumper settings

Jumper	Position
J14	Not present
J15	Present
J16	Present (default)
J17	Not present

2.6.5 Overcurrent protection

A hardware overcurrent protection has been implemented through a comparator. The typical transition speed under the 5 V supply is about 2 µs from 50 mV overdrive.

Figure 13. Overcurrent protection circuit

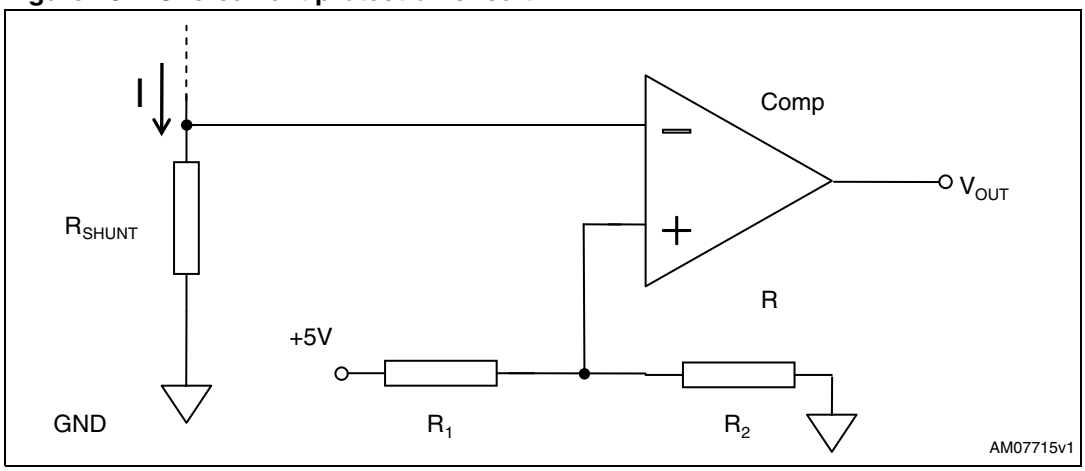

With the resistor values actually used in the circuit schematic:

R1= 15 kΩ, R2=3 kΩ and Rshunt=0.1 Ω

it results:

Equation 11

$$\text{Iower}_{\text{current}} = 5 \cdot \frac{R2}{R1 + R2} \cdot \frac{1}{\text{Rshunt}}$$

that fixes the overcurrent threshold peak value at 8.33 A.

2.7 Temperature sensing and protection

A hardware temperature sensing has also been implemented on the STEVAL-IHM031V1 demonstration board. As this signal is available on the MC connector, with a proper control logic, this feature helps to fully protect the switches against damage when power loss reaches some defined value.

The temperature is sensed with an NTC resistor placed close to the power MOSFET device. The measured analog value is fed through the MC connector to the control unit part and, for instance, can be read with an AD converter of the microcontroller.

Figure 14. Temperature sensing circuit

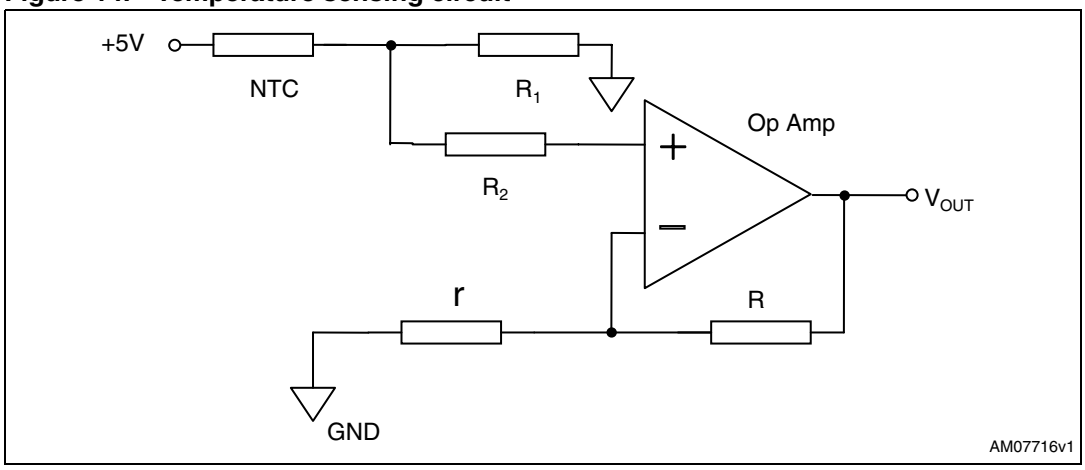

With the following used resistor values:

RNTC = 10 kΩ, R1 = 130 Ω, R2 = r = 10 kΩ, and R = 39 kΩ, the shut down temperature is around 70 °C.

3 Descriptions of connectors and jumpers

Details of jumper setting meanings and pinout connectors present in the board are shown in *Table 12* and *13*.

3.1 Jumper description

Table 12. Jumper description

Jumper	Position/ selection	Description
J1	1 - 2	BEMF voltage phase A is amplified
	2 - 3	BEMF voltage phase A is not amplified
J2	1 - 2	MC_Fdbk1 is connected to BEMF Va signal
	2 - 3	MC_Fdbk1 is connected to sensor H1/EncA signal
J4	1 - 2	BEMF voltage phase B is amplified
	2 - 3	BEMF voltage phase B is not amplified
J5	1 - 2	MC_Fdbk2 is connected to BEMF Vb signal
	2 - 3	MC_Fdbk2 is connected to sensor H2/EncB signal
J6	1 - 2	Speed/position sensor supply voltage is 5 V
	2 - 3	Speed/position sensor supply voltage is Vdd_micro
J7	1 - 2	BEMF voltage phase C is amplified
	2 - 3	BEMF voltage phase C is not amplified
J8	1 - 2	MC_Fdbk3 is connected to BEMF Vc signal
	2 - 3	MC_Fdbk3 is connected to sensor H3/EncC signal
J9	1 - 2	Star point voltage is built up through three resistors
	2 - 3	Star point voltage is derived by bus voltage
J10	Present	Bipolar current B reading configuration
	Not present	Unipolar current B reading configuration
J11	1 - 2	Bipolar current B reading configuration
	2 - 3	Unipolar current B reading configuration
J12	Present	Bipolar current B reading configuration
	Not present	Unipolar current B reading configuration
J14,J15	See *Section 2.6* for details	Select between three-shunt or single-shunt reading for current A
J16, J17	See *Section 2.6* for details	Select between three-shunt or single-shunt reading for current C

Table 12. Jumper description (continued)

Jumper	Position/ selection	Description
J18	1 - 2	Current A pin of MC_connector is connected to motor windings natural point
	2 - 3	Current A pin of MC connector is connected to amplified signal of motor current phase A
J19	Present/not present	Connect/disconnect + 5 V power voltage to corresponding + 5 V power pin of MC connector
J20	1 - 2	Connect 3.3 V power pin of MC connector to + 5 V power voltage
	2 - 3	Connect 3.3 V power pin of MC connector to + 3.3 V power voltage
J23	1 - 2	+5 V is a power voltage
	2 - 3	+5 V is a reference voltage

3.2 Connector placement

Figure 15. STEVAL-IHM0031V1 connector placement

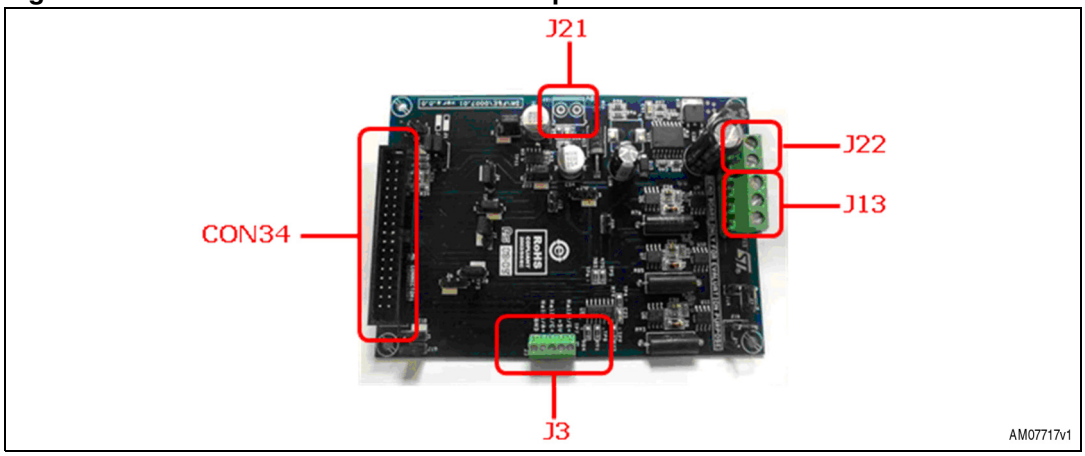

3.3 Connector description

Table 13. Connector pinout description

Name	Reference	Description/pinout
J3	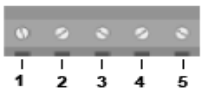	Hall sensor/encoder input connector 1 – GND 2 – 5 V DC 3 – Hall3/EncC 4 – Hall2/EncB 5 – Hall1/EncA
J13	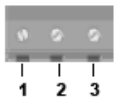	Motor phase out connector 1 – phase A 2 – phase B 3 – phase C
CON34	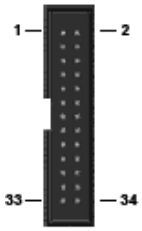	Motor control connector 1 - Emergency stop 3 - MC_UH 5 - MC_UL 7 - MC_VH 9 - MC_VL 11 - MC_WH 13 - MC_WL voltage 15 - Current A 17 - Current B 19 - Current C 21 - NTC bypass relay 23 - dissipative brake 25 - 5 V power 27 - PFC sync 29 - PFC PWM 31 - Encoder A 33 - Encoder B 2 - GND 4 - GND 6 - GND 8 - GND 10 - GND 12 - GND 14 - Bus voltage 16 - GND 18 - GND 20 - GND 22 - GND 24 - GND 26 - Heat. Temp. 28 - 3.3 V power 30 - GND 32 - GND 34 - Encoder Ind.
J22		Board supply connector 1 - +Vbus 2 - GND
J21	Not mounted	8 V auxiliary supply connector 1 - +8 VDC 2 - GND

4 STEVAL-IHM0031V1 hardware settings

4.1 Settings for six-step current control (block commutation)

Six-step BLDC motor control requires one shunt resistor for sensing the motor current. Moreover, for detecting rotor position, the user can choose between sensored or sensorless techniques. In the first case, generally, Hall sensor signals are available from motor wires and they must be connected to the J3 connector on the board.

Alternatively, sensorless rotor position detecting is performed by reading the back-EMF voltage of the floating motor phase during running time.

The way this signal is processed depends on the sensorless technique the user wants to implement.

In the following tables all the jumper configurations to drive BLDC motors in six-step configuration are detailed.

Table 14. Single-shunt current reading - jumper configuration

Jumper	Position / selection
J10	Not present
J11	Between 2 and 3
J12	Not present
J14	Not present
J15	Present
J16	Present
J17	Not present

Table 15. Sensored mode - jumper configuration (Hall sensors for rotor position detecting)

Jumper	Position / selection
J2	Between 2 and 3
J5	Between 2 and 3
J8	Between 2 and 3

Table 16. Sensorless mode - jumper configuration (BEMF reading w/o amplification)

Jumper	Position / selection
J1	Between 2 and 3
J4	Between 2 and 3
J7	Between 2 and 3

Table 16. Sensorless mode - jumper configuration (BEMF reading w/o amplification) (continued)

Jumper	Position / selection
J2	Between 1 and 2
J5	Between 1 and 2
J8	Between 1 and 2

Table 17. Sensorless mode - jumper configuration (low BEMF reading w/o amplification)

Jumper	Position / selection
J1	Between 1 and 2
J4	Between 1 and 2
J7	Between 1 and 2
J2	Between 1 and 2
J5	Between 1 and 2
J8	Between 1 and 2

Table 18. Virtual neutral point reconstruction - jumper configuration

Jumper	Position / selection
J9	Between 1 and 2 - for three resistors reconstruction
	Between 2 and 3 - for DC bus voltage reconstruction
J18	Between 1 and 2

4.2 Settings for three-shunt configuration and FOC control

PMAC motors driven with field oriented control techniques need proper hardware configuration of the three-phase inverter power stage. In particular, currents flowing in the motor phases must be read through shunt resistors and their values must be amplified for control unit processing. Generally, the current conditioning network has a different topology than the one used in scalar control.

Sensored and sensorless techniques for motor speed reading can also be used in FOC control.

Table 19 shows the jumper settings according to the three-shunt current reading configuration.

Table 19. Three-shunt current reading

Jumper	Position / selection
J10	Present
J11	Between 1 and 2
J12	Present
J14	Present
J15	Not present
J16	Not present
J17	Present
J18	Between 2 and 3

The way in which to set the jumpers, when a speed or position sensor is connected to the power board, is shown in *Table 20*:

Table 20. Encoder/Hall sensor speed reading

Jumper	Position / selection
J2	Between 2 and 3
J5	Between 2 and 3
J8	Between 2 and 3

5 Board schematic

Figure 16. Bemf_hall_encoder schematic

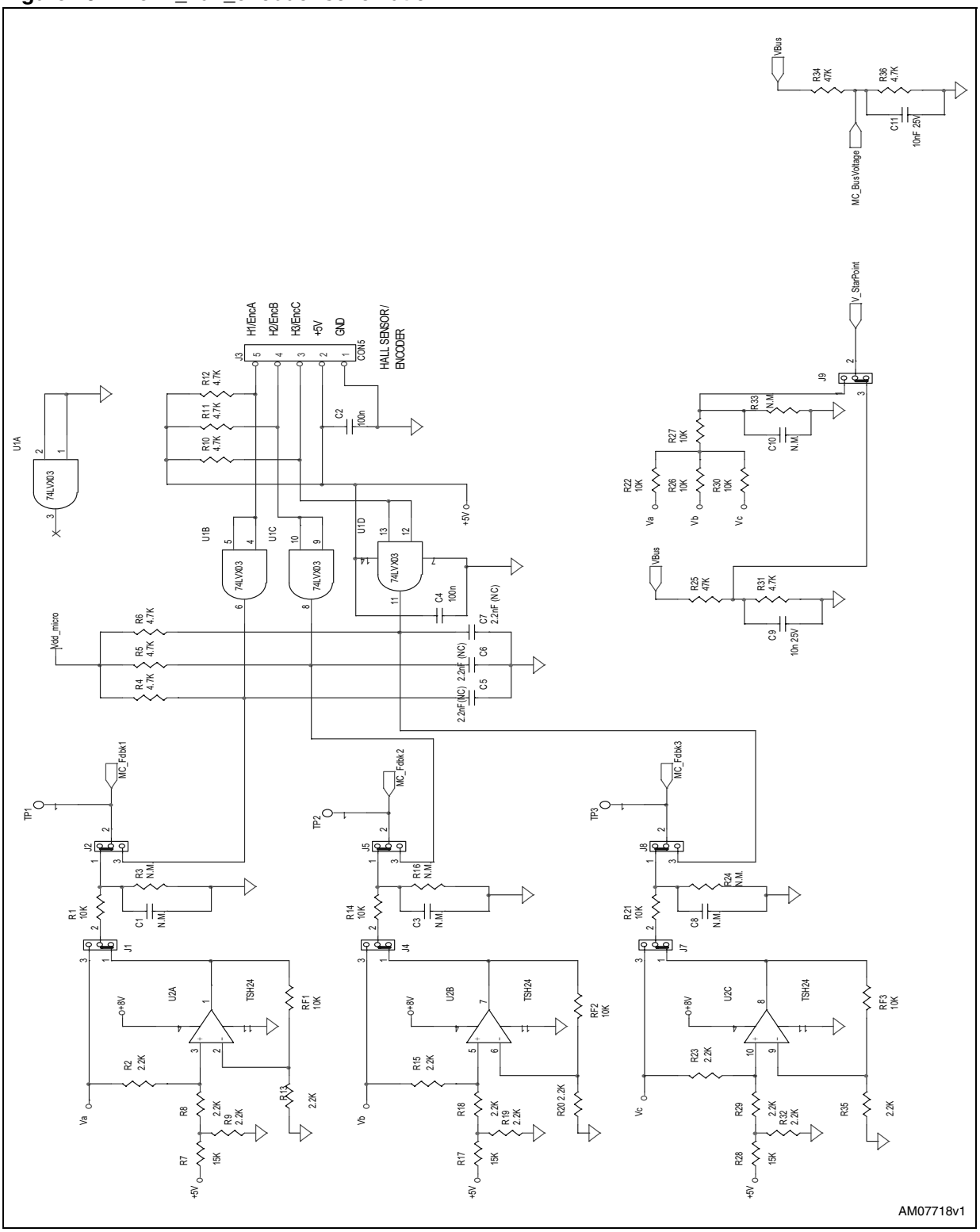

Figure 17. Current conditioning network schematic

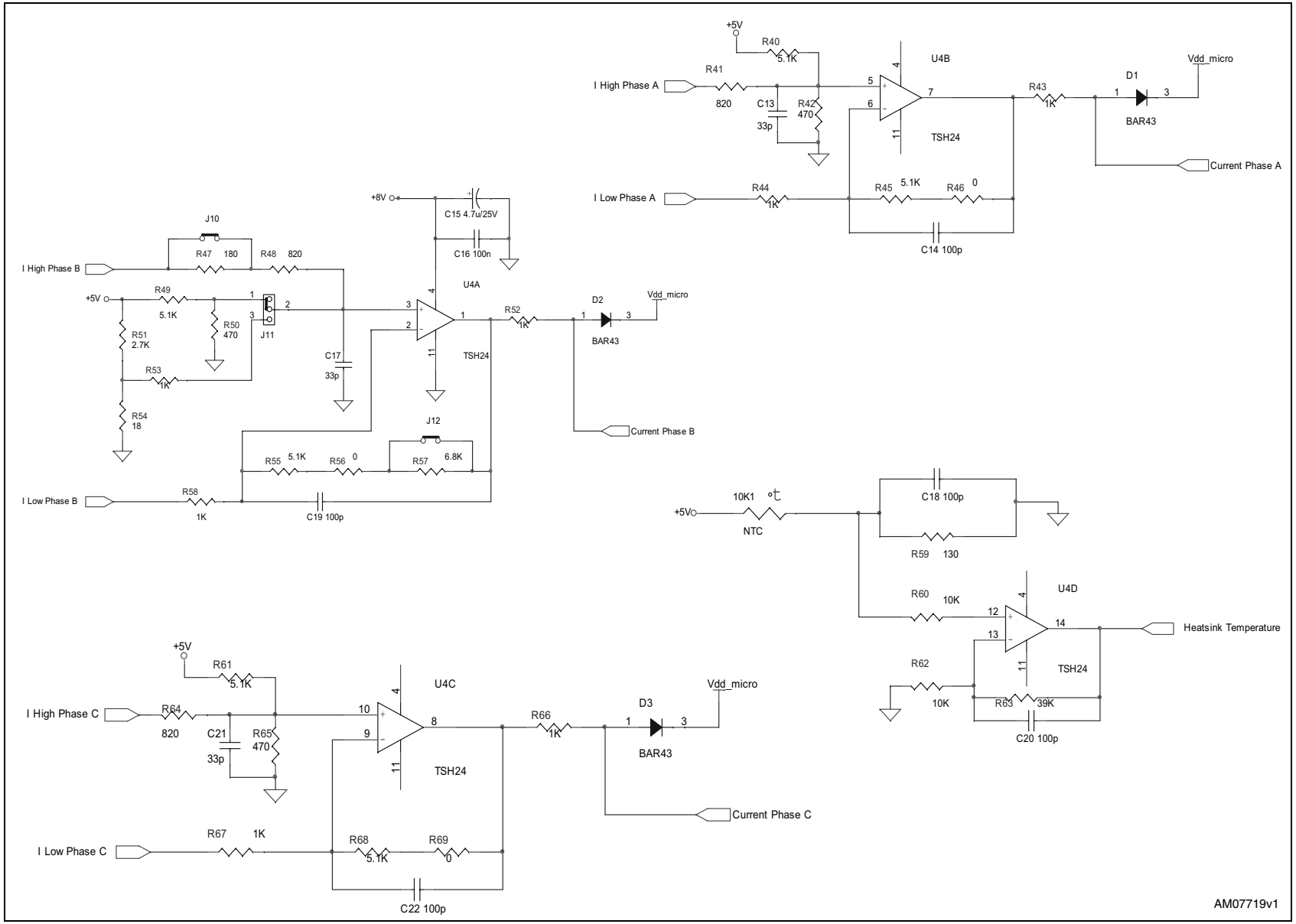

Figure 18. Driver and power MOSFET schematic

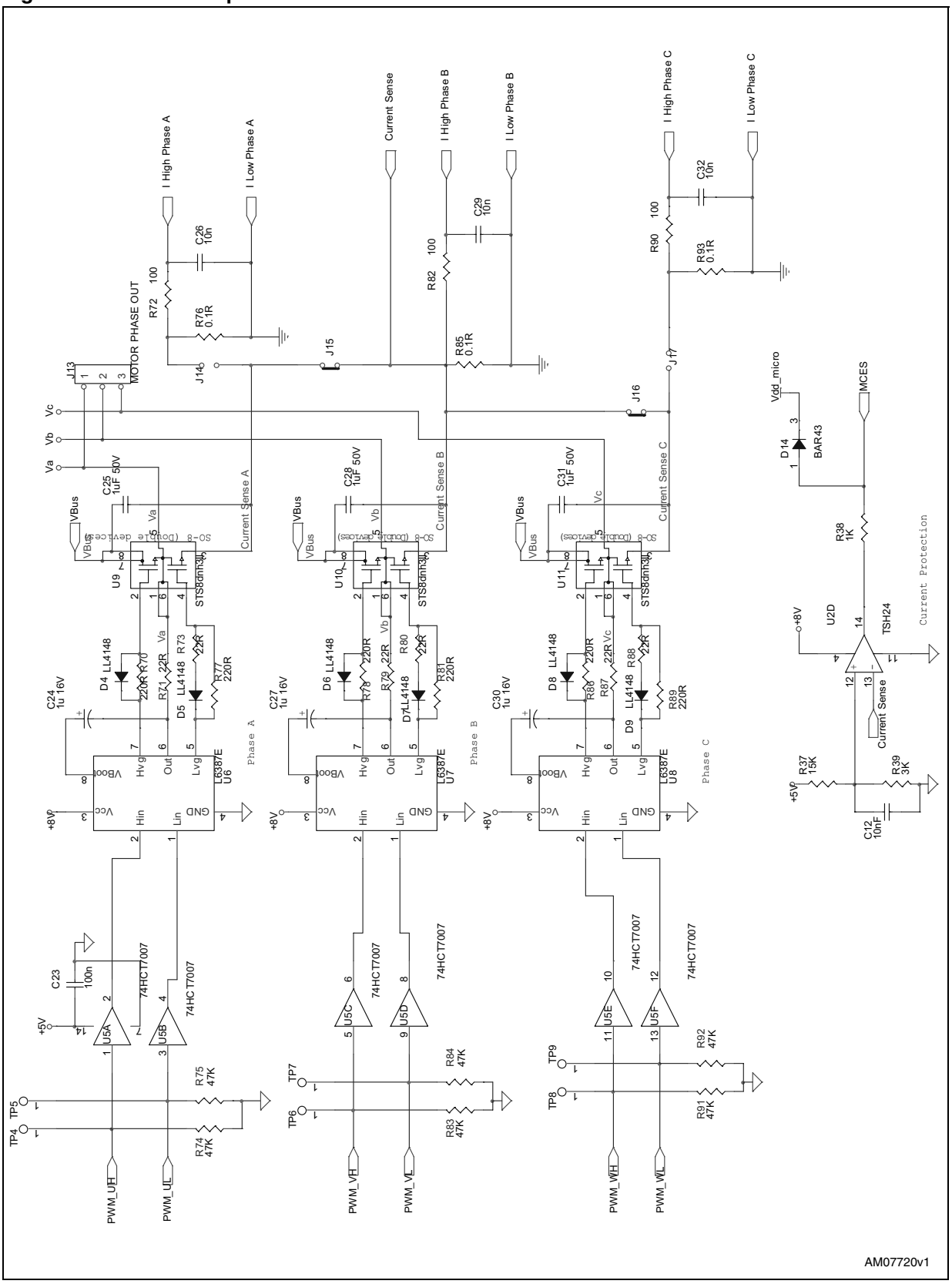

Figure 19. Motor control connector schematic

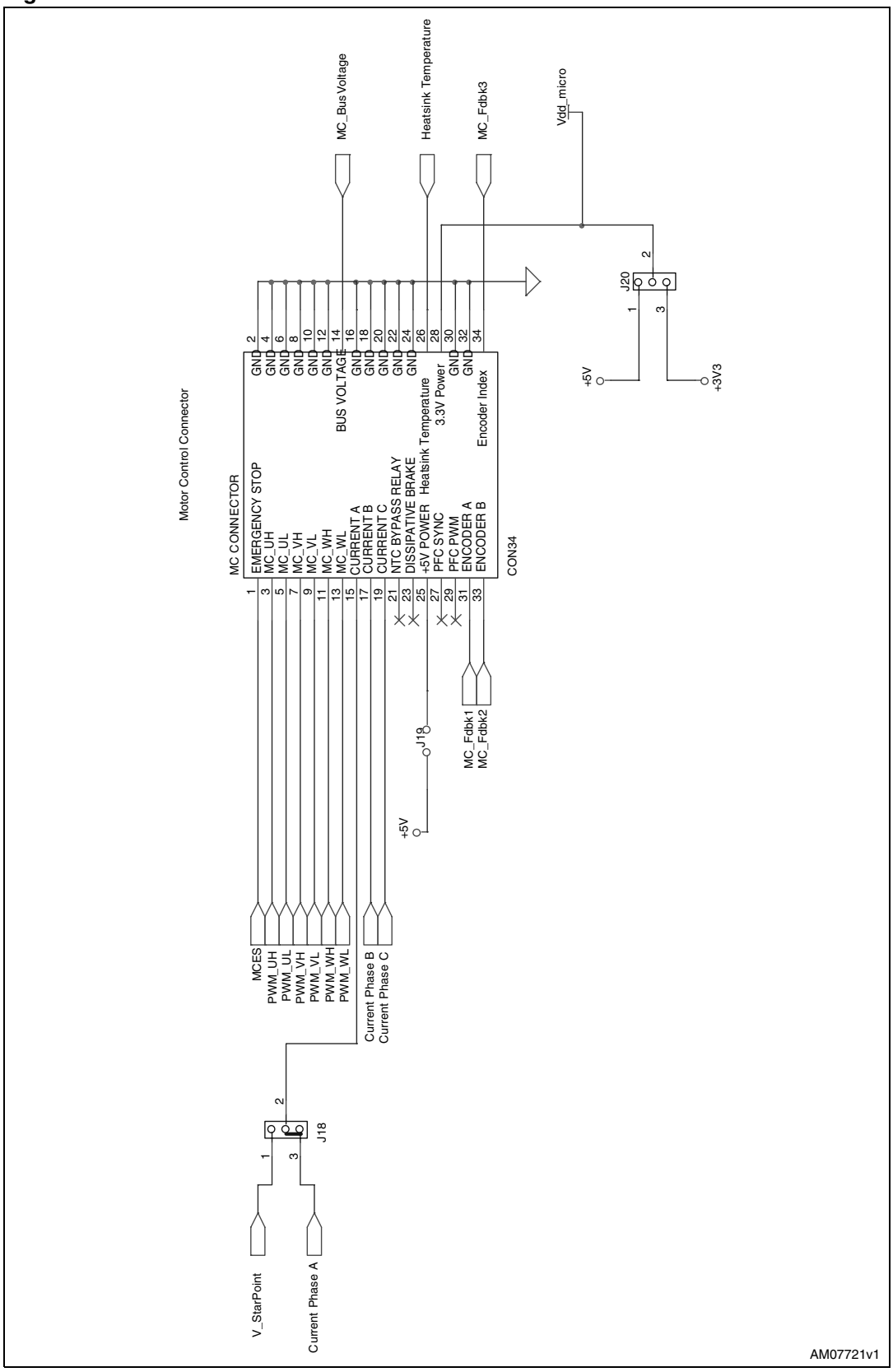

Figure 20. Power supply schematic

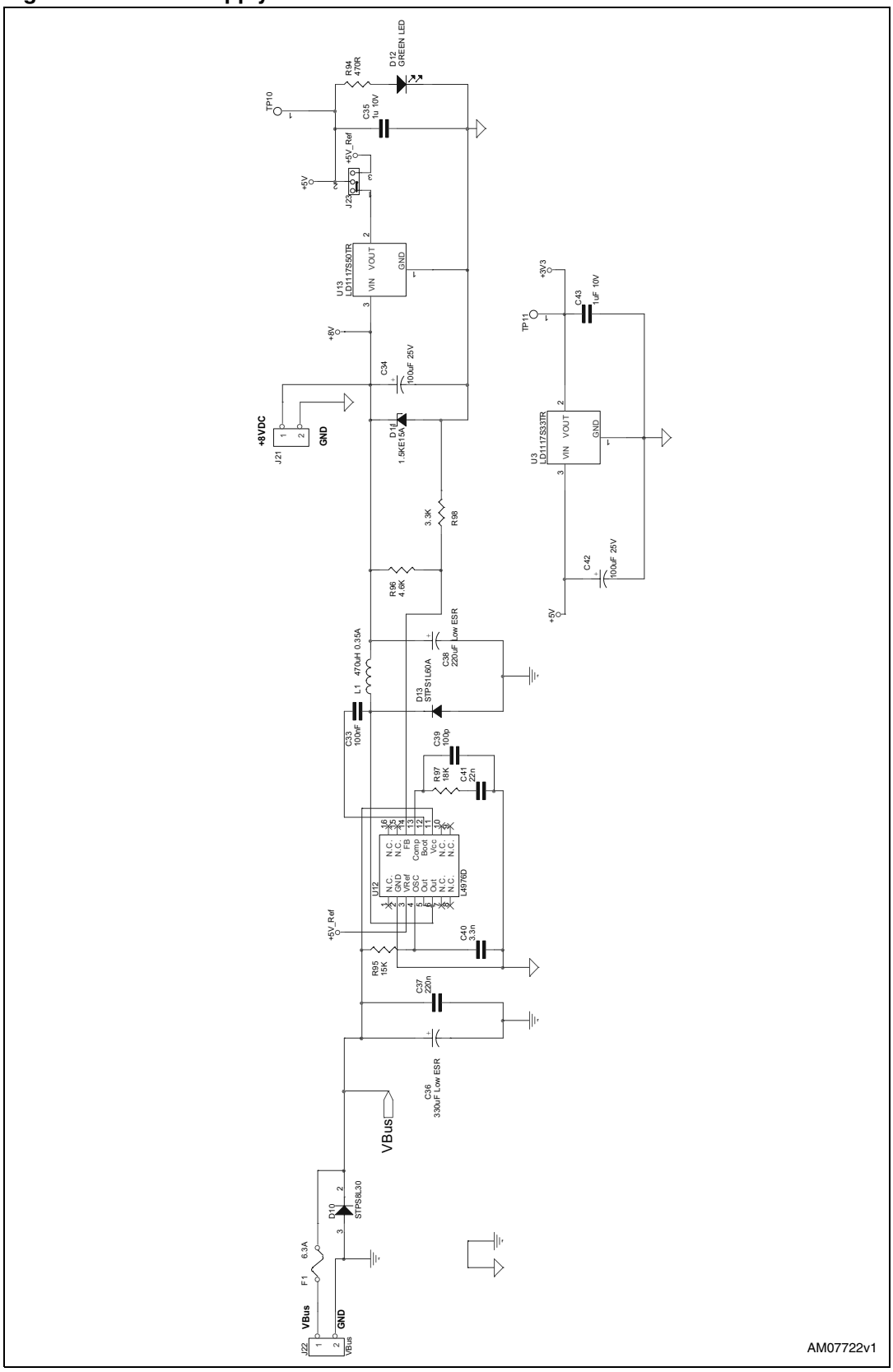

6 BOM list

Table 21. BOM

Reference	Part / value	Tolerance %	Voltage current	Watt	Technology information	Package	Manuf.	Manuf. code	RS/Distrelec/ other code	More info
C1,R3,C3, C8, C10,R16, R24, R33	N.M.					SMD 0805				not mounted
C2,C4,C16 ,C23, C33	100 nF	10 %	25 V		X7R ceramic capacitor	SMD 0805	Any			
C5,C6,C7	2.2 nF (N.M.)	10 %	50 V		X7R ceramic capacitor	SMD 0805	Any			Not mounted
C9, C11,C12, C26, C29,C32	10 nF	10 %	50 V		X7R ceramic capacitor	SMD 0805	Any			
C13,C17, C21	33 pF	5 %	50 V		COG ceramic capacitor	SMD 0805	Any			
C14,C18, C19, C20,C22, C39	100 pF	5 %	50 V		COG ceramic capacitor	SMD 0805	Any			
C15	4.7 µF	10 %	25 V		Tantalum capacitor	SMD	Any		RS:407-0255	
C24,C27, C30	1 µF	10 %	16 V		X7R ceramic capacitor	SMD 0805	Any			
C25,C28, C31	1 µF	10 %	50 V		X7R ceramic capacitor	SMD 0805	EPCOS		Distrelec: 820271	

Table 21. BOM (continued)

Reference	Part / value	Tolerance %	Voltage current	Watt	Technology information	Package	Manuf.	Manuf. code	RS/Distrelec/ other code	More info
C34, C42	100 µF	20 %	25 V		Aluminium electrolytic capacitor	SMD 8 mm diameter	Any		RS: 547-9158	
C35, C43	1 µF	10 %	10 V		X7R ceramic capacitor	SMD 0805	Any			
C36	330 µF	20 %	50 V		Ultra low ESR electrolytic capacitor ZL series	THT radial 10 mm diameter	RUBYCON		Distrelec:801 853	
C37	220 nF	10 %	50 V		X7R ceramic capacitor	SMD 0805	Any			
C38	220 µF	20 %	25 V		Ultra low ESR electrolytic capacitor ZL series	THT radial 8 mm diameter	RUBYCON		Distrelec:801 845	
C40	3.3 nF	5 %	25 V		COG ceramic capacitor	SMD 0805	Any			
C41	22 nF	5 %	50 V		COG ceramic capacitor	SMD 1206	Any		RS: 624-2648	
D1,D2,D3, D14	BAR43		100 mA		Small signal Schottky diode	SMD SOT23	STMicroelectronics	BAR43FILM		
D4,D5,D6, D7,D8,D9	LL4148		150 mA		Small signal rectifier diode	SMD mini melf	Any			
D10	STPS8L30				Low drop power Schottky rectifier	SMD DPAK	STMicroelectronics	STPS8L30B		
D11	1.5KE15A		15 V		TRANSIL diode	DO-201	STMicroelectronics	1.5KE15A		

Table 21. BOM (continued)

Reference	Part / value	Tolerance %	Voltage current	Watt	Technology information	Package	Manuf.	Manuf. code	RS/Distrelec/ other code	More info
D12	Green LED	20 mA		Green LED	SMD 0805	any		RS: 654-5773		
D13	STPS1L60 A	1 A/60 V		Power Schottky rectifier	SMD DO-214AC	STMicroelectronics	STPS1L60A			
F1	6.3 A		6.3 A/250 V		subminiature 6.3 A fuse	THT			Distrelec:271 358	mount with fusehold er: distrelec 273250
J1,J2,J4, J5,J7,J8, J9,J11, J18,J20, J23	CON3_1				3-way vertical strip line connector (male connector)	THT 2.54 mm	Any		RS:495-8470	
J3	Hall sensor / encoder			5-way PCB vertical mount terminal, 2.54 mm	THT 2.54 mm	Phoenix Contact	Any	RS:220-4298		
J10,J12, J19	Jumper				2-way vertical strip line connector (male connector)	THT 2.54 mm	any		RS:495-8470	
J14, J17	Jumper				Do not fit	Do not fit	Do not fit	Do not fit	Do not fit	Do not fit

Table 21. BOM (continued)

Reference	Part / value	Tolerance %	Voltage current	Watt	Technology information	Package	Manuf.	Manuf. code	RS/Distrelec/ other code	More info
J15, J16	Jumper				soldering directly wire (1,00 mm diameter)	THT				
J13	Motor phase out			3-way screw terminal block 5.08 mm pitch	THT 5.08 mm	any		RS:189-5865		
J21	+8 V				2-way screw terminal block 5.08 mm pitch	THT 5.08 mm	Any		RS:193-0586	not mounted
J22	VBus				2-way screw terminal block 5.08 mm pitch	THT 5.08 mm	Any		RS:193-0586	
L1	470 µH		0.5 A		power inductor SMT shielded	SMD 10x10 mm	EPCOS	B82464G4474M	RS:496-0697	
MC connector	CON34				34-way IDC straight boxed header	THT	Any		RS:625-7347	
RF1,RF2, RF3	10 kΩ	1 %	150 V	0.125 W	Metal film resistor	SMD 0805	Any			
R1,R14, R21,R22, R26,R30, R60, R62,R27	10 kΩ	1 %	150 V	0.125 W	Metal film resistor	SMD 0805	Any			

Table 21. BOM (continued)

Reference	Part / value	Tolerance %	Voltage current	Watt	Technology information	Package	Manuf.	Manuf. code	RS/Distrelec/ other code	More info
R2,R8,R9, R13, R15,R18, R19, R20,R23, R29,R32, R35	2.2 kΩ	1 %	150 V	0.125 W	Metal film resistor	SMD 0805	Any			
R4,R5,R6, R10, R11,R12, R31, R36	4.7 kΩ	1 %	150 V	0.125 W	Metal film resistor	SMD 0805	Any			
R7,R17,R28,R37,R95	15 kΩ	1 %	150 V	0.125 W	Metal film resistor	SMD 0805	Any			
R25,R34, R74, R75,R83, R84,R91, R92	47 kΩ	1 %	150 V	0.125 W	Metal film resistor	SMD 0805	Any			
R39	3 kΩ	1 %	150 V	0.125 W	Metal film resistor	SMD 0805	Any			
R41,R48, R64	820 Ω	1 %	150 V	0.125 W	Metal film resistor	SMD 0805	Any			
R38,R43, R44, R52,R53, R58,R66, R67	1 kΩ	1 %	150 V	0.125 W	Metal film resistor	SMD 0805	Any			
R46,R56, R69	0	1 %	150 V	0.125 W	Metal film resistor	SMD 0805	Any			
R51	2.7 kΩ	1 %	150 V	0.125 W	Metal film resistor	SMD 0805	Any			

Table 21. BOM (continued)

Reference	Part / value	Tolerance %	Voltage current	Watt	Technology information	Package	Manuf.	Manuf. code	RS/Distrelec/ other code	More info
R47	180 Ω	1 %	150 V	0.125 W	Metal film resistor	SMD 0805	Any			
R54	18 Ω	1 %	150 V	0.125 W	Metal film resistor	SMD 0805	Any			
R40,R45, R49, R55,R61, R68	5.1 kΩ	1 %	150 V	0.125 W	Metal film resistor	SMD 0805	Any			
R57	6.8 kΩ	1 %	150 V	0.125 W	Metal film resistor	SMD 0805	Any			
R59	130 Ω	1 %	150 V	0.125 W	Metal film resistor	SMD 0805	Any			
R63	39 kΩ	1 %	150 V	0.125 W	Metal film resistor	SMD 0805	Any			
R71,R73, R79, R80,R87, R88	22 Ω	1 %	150 V	0.125 W	Metal film resistor	SMD 0805	Any			
R72,R82, R90	100 Ω	1 %	150 V	0.125 W	Metal film resistor	SMD 0805	Any			
R70,R78, R86, R77,R81, R89	220 Ω	5 %	150 V	0.125 W	Metal film resistor	SMD 0805	Any			
R76,R85, R93	0.1 Ω	3 %		3 W	non inductive resistor LOB3 type	THT	IRC		Distrelec:710 520	
R42,R50, R65, R94	470 Ω	5 %	150 V	0.125 W	metal film resistor	SMD 0805	Any			

Table 21. BOM (continued)

Reference	Part / value	Tolerance %	Voltage current	Watt	Technology information	Package	Manuf.	Manuf. code	RS/Distrelec/ other code	More info
R96	4.64 kΩ	1 %	200 V	0.25 W	Metal film resistor	SMD 1206	Any			
R97	18 kΩ	1 %	150 V	0.125 W	Metal film resistor	SMD 0805	Any			
R98	3.3 kΩ	1 %	200 V	0.25 W	Metal film resistor	SMD 1206	Any			
TP1,TP2, TP3, TP4,TP5, TP6, TP7,TP8, TP9, TP10, TP11	test point				SMD test point					
U1	74LVX03				Low voltage cMOS quad 2-input NAND gate (open drain)	SMD TSSO14	STMicroelectronics	74LVX03TTR		
U2,U4	TSH24				QUAD bipolar operational amplifier	SMD SO14	STMicroelectronics	TSH24ID		
U3	LD1117S33				Low drop positive voltage regulators	SOT-223	STMicroelectronics	LD1117S33TR		
U5	74HCT7007				Hex buffer	SMD SO14	STMicroelectronics	M74HCT7007RM13TR		
U6,U7,U8	L6387E				High-voltage high and low side driver	SMD SO8	STMicroelectronics	L6387ED		

Table 21. BOM (continued)

Reference	Part / value	Tolerance %	Voltage current	Watt	Technology information	Package	Manuf.	Manuf. code	RS/Distrelec/ other code	More info
U9,U10, U11	STS8dnh3ll (1)	8 A/30 V		Dual N-channel low gate charge STripFET™ III power MOSFET	SMD SO-8	STMicroelectronics	STS8DNH3LL			
U12	L4976D		1 A		1 A step down switching regulator	SMD SO16W	STMicroelectronics	L4976D		
U13	LD1117S50TR	800 mA		Low drop positive voltage regulators	SMD SOT-223	STMicroelectronics	LD1117S50TR			
NTC	10 kΩ	5 %		0.125 W	NTC SMT chip thermistor	SMD 0805	Tyco Electronics	NTC0805J10K	RS:247-7418	

7 References

For additional information on BLDC and PMAC motor driving techniques, circuital solutions and advanced algorithm, please refer to the application notes reported below.

The list includes references to the user manuals of some demonstration boards, based on ST 8/32-bit microcontrollers, that can be interfaced with this power stage.

- AN1946
- AN2030
- AN1103
- UM0482
- UM0426
- UM0488
- UM0686
- UM0747

8 Revision history

Table 22. Document revision history

Date	Revision	Changes
27-Oct-2010	1	Initial release.

Please Read Carefully:

Information in this document is provided solely in connection with ST products. STMicroelectronics NV and its subsidiaries (“ST”) reserve the right to make changes, corrections, modifications or improvements, to this document, and the products and services described herein at any time, without notice.

All ST products are sold pursuant to ST’s terms and conditions of sale.

Purchasers are solely responsible for the choice, selection and use of the ST products and services described herein, and ST assumes no liability whatsoever relating to the choice, selection or use of the ST products and services described herein.

No license, express or implied, by estoppel or otherwise, to any intellectual property rights is granted under this document. If any part of this document refers to any third party products or services it shall not be deemed a license grant by ST for the use of such third party products or services, or any intellectual property contained therein or considered as a warranty covering the use in any manner whatsoever of such third party products or services or any intellectual property contained therein.

UNLESS OTHERWISE SET FORTH IN ST’S TERMS AND CONDITIONS OF SALE ST DISCLAIMS ANY EXPRESS OR IMPLIED WARRANTY WITH RESPECT TO THE USE AND/OR SALE OF ST PRODUCTS INCLUDING WITHOUT LIMITATION IMPLIED WARRANTIES OF MERCHANTABILITY, FITNESS FOR A PARTICULAR PURPOSE (AND THEIR EQUIVALENTS UNDER THE LAWS OF ANY JURISDICTION), OR INFRINGEMENT OF ANY PATENT, COPYRIGHT OR OTHER INTELLECTUAL PROPERTY RIGHT.

UNLESS EXPRESSLY APPROVED IN WRITING BY AN AUTHORIZED ST REPRESENTATIVE, ST PRODUCTS ARE NOT RECOMMENDED, AUTHORIZED OR WARRANTED FOR USE IN MILITARY, AIR CRAFT, SPACE, LIFE SAVING, OR LIFE SUSTAINING APPLICATIONS, NOR IN PRODUCTS OR SYSTEMS WHERE FAILURE OR MALFUNCTION MAY RESULT IN PERSONAL INJURY, DEATH, OR SEVERE PROPERTY OR ENVIRONMENTAL DAMAGE. ST PRODUCTS WHICH ARE NOT SPECIFIED AS "AUTOMOTIVE GRADE" MAY ONLY BE USED IN AUTOMOTIVE APPLICATIONS AT USER’S OWN RISK.

Resale of ST products with provisions different from the statements and/or technical features set forth in this document shall immediately void any warranty granted by ST for the ST product or service described herein and shall not create or extend in any manner whatsoever, any liability of ST.

ST and the ST logo are trademarks or registered trademarks of ST in various countries.

Information in this document supersedes and replaces all information previously supplied.

The ST logo is a registered trademark of STMicroelectronics. All other names are the property of their respective owners.

© 2010 STMicroelectronics - All rights reserved

STMicroelectronics group of companies

Australia - Belgium - Brazil - Canada - China - Czech Republic - Finland - France - Germany - Hong Kong - India - Israel - Italy - Japan - Malaysia - Malta - Morocco - Philippines - Singapore - Spain - Sweden - Switzerland - United Kingdom - United States of America

www.st.com